Electrolux PROFESSIONAL

Modular Cooking Range Line 700XP 11 lt. Electric Multifunctional Cooker with compound bottom

ITEM #

MODEL #

NAME #

SIS #

AIA #

371109 (E7MFEDDD00)	11-lt electric Multifunctional Cooker with compound steel cooking surface

Short Form Specification

Item No.

Heating via incoloy armoured heating elements.To be installed on 50 mm high feet for cleaning ease. Well to have rounded corners and cooking surface in compound steel (a 3mm layer of 316 AISI stainless steel on top of a 12mm layer of mild steel). Exterior panels in stainless steel with Scotch Brite finish. One piece pressed work top in 1.5 mm thick stainless steel. Right-angled side edges to allow flush-fitting junction between units.

APPROVAL:

Main Features

- Multi purpose cooking appliance that can be used to shallow fry, cook liquids or even as a bain marie. Unit can be used for sautéing, poaching, steaming, simmering, stewing, braising, boiling and preparing white sauces.
- Well cooking surface made in compound steel (a 3mm layer of 316 AISI stainless steel on top of a 12mm layer of mild steel) for optimum grilling results.
- The stainless steel well to have rounded corners to facilitate cleaning.
- Bottom temperature control is precisely set by a thermostat on the control panel.
- Temperature can be set from 100 °C to 250 °C.
- Uniform temperature distribution over the whole base.
- Short heat-up time of the empty pan.
- Unit to be heated via incoloy armoured heating elements.
- Unit delivered with four 50 mm legs in stainless steel as standard (all round Stainless steel kick plates as option).

Construction

- All exterior panels in Stainless Steel with Scotch Brite finishing.
- One piece pressed 1.5 mm work top in Stainless steel.
- Model has right-angled side edges to allow flush fitting joints between units, eliminating gaps and possible dirt traps.
- Delivered with runners for gastronorm container.

Included Accessories

- 1 of Scraper for smooth plate fry tops — PNC 164255
- 1 of Blades with rounded sides for scraper for multifunctional cookers — PNC 921694

Optional Accessories

- Junction sealing kit — PNC 206086 ❑
- Kit 4 wheels - 2 swivelling with brake - it is mandatory to install Base support and wheels — PNC 206135 ❑
- Flanged feet kit — PNC 206136 ❑
- Frontal kicking strip for concrete installation, 400mm — PNC 206147 ❑
- Frontal kicking strip for concrete installation, 800mm — PNC 206148 ❑
- Frontal kicking strip for concrete installation, 1000mm — PNC 206150 ❑
- Frontal kicking strip for concrete installation, 1200mm — PNC 206151 ❑
- Frontal kicking strip for concrete installation, 1600mm — PNC 206152 ❑
- Frontal kicking strip, 400mm (not for refr-freezer base) — PNC 206175 ❑
- Frontal kicking strip, 800mm (not for refr-freezer base) — PNC 206176 ❑
- Frontal kicking strip, 1000mm (not for refr-freezer base) — PNC 206177 ❑
- Frontal kicking strip, 1200mm (not for refr-freezer base) — PNC 206178 ❑
- Frontal kicking strip, 1600mm (not for refr-freezer base) — PNC 206179 ❑
- Kit 4 feet for concrete installation (not for 900 line free standing grill) — PNC 206210 ❑
- 2 supports with side runners for 4 GN 1/1 containers for open base cupboards (multifunctional cookers, solid top and gas ranges with cupboard) — PNC 206244 ❑
- Pair of side kicking strips — PNC 206249 ❑
- Pair of side kicking strips for concrete installation — PNC 206265 ❑
- Chimney upstand, 200mm — PNC 206302 ❑
- Chimney upstand, 400mm — PNC 206303 ❑
- Right and left side handrails — PNC 206307 ❑
- Back handrail 800 mm — PNC 206308 ❑
- Door for open base cupboard — PNC 206350 ❑
- Base support for feet or wheels - 400mm (700/900) — PNC 206366 ❑
- Base support for feet or wheels - 800mm (700/900) — PNC 206367 ❑
- Base support for feet or wheels - 1200mm (700/900) — PNC 206368 ❑
- Base support for feet or wheels - 1600mm (700/900) — PNC 206369 ❑
- Base support for feet or wheels - 2000mm (700/900) — PNC 206370 ❑
- Rear paneling - 600mm (700/900XP) — PNC 206373 ❑
- Rear paneling - 800mm (700/900) — PNC 206374 ❑
- Rear paneling - 1000mm (700/900) — PNC 206375 ❑
- Rear paneling - 1200mm (700/900) — PNC 206376 ❑
- Base support for feet or wheels - 600mm (700/900) — PNC 206431 ❑
- 2 side covering panels for free standing appliances — PNC 216000 ❑
- Frontal handrail, 400mm — PNC 216046 ❑
- Frontal handrail, 800mm — PNC 216047 ❑
- Frontal handrail, 1200mm — PNC 216049 ❑
- Frontal handrail, 1600mm — PNC 216050 ❑
- Large handrail - portioning shelf, 400mm — PNC 216185 ❑
- Large handrail - portioning shelf, 800mm — PNC 216186 ❑
- Lid for 11lt multifunctional cooker — PNC 921689 ❑

Recommended Detergents

- C41 HI-TEMP RAPID DEGREASER. Suitable for cleaning plates and grills with high temperature surfaces (max 175°C). Pack of 6 1l bottles (includes 1 spray bottle code 0S2331) — PNC 0S2292 ❑

The company reserves the right to make modifications to the products without prior notice. All information correct at time of printing.

2024.10.08

Modular Cooking Range Line 700XP 11 lt. Electric Multifunctional Cooker with compound bottom

Front

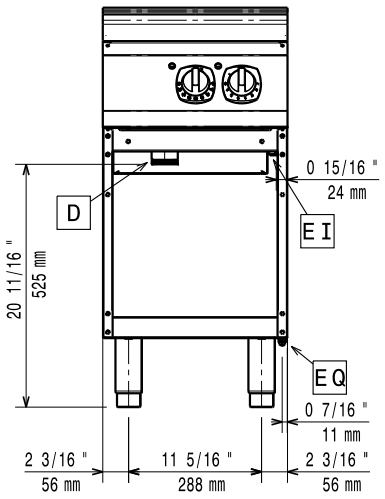

Side

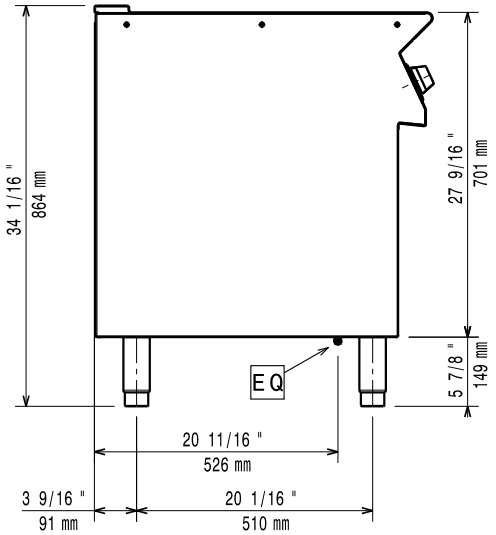

EI = Electrical inlet (power)
EQ = Equipotential screw

Top

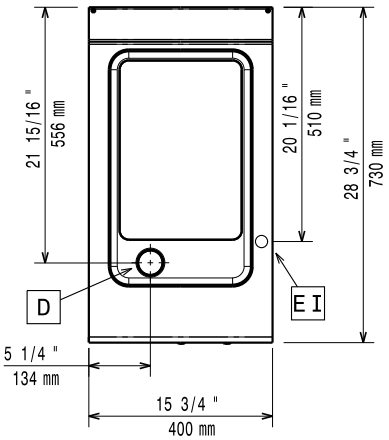

Electric

Supply voltage:	
371109 (E7MFEDDD00)	380-400 V/3N ph/50/60 Hz
Total Watts:	5 kW
Predisposed for:	380-400V 3N~ 50/60Hz 4,5-5kW

Key Information:

Cooking surface width:	306 mm
Cooking surface depth:	510 mm
Cooking Well Height:	70 mm
Working Temperature MIN:	100 °C
Working Temperature MAX:	250 °C
External dimensions, Width:	400 mm
External dimensions, Depth:	730 mm
External dimensions, Height:	850 mm
Net weight:	40 kg
Shipping weight:	51 kg
Shipping height:	1140 mm
Shipping width:	460 mm
Shipping depth:	820 mm
Shipping volume:	0.43 m³

If appliance is set up or next to or against temperature sensitive furniture or similar, a safety gap of approximately 150 mm should be maintained or some form of heat insulation fitted.

Certification group:	N7BRE1

The company reserves the right to make modifications to the products without prior notice. All information correct at time of printing.